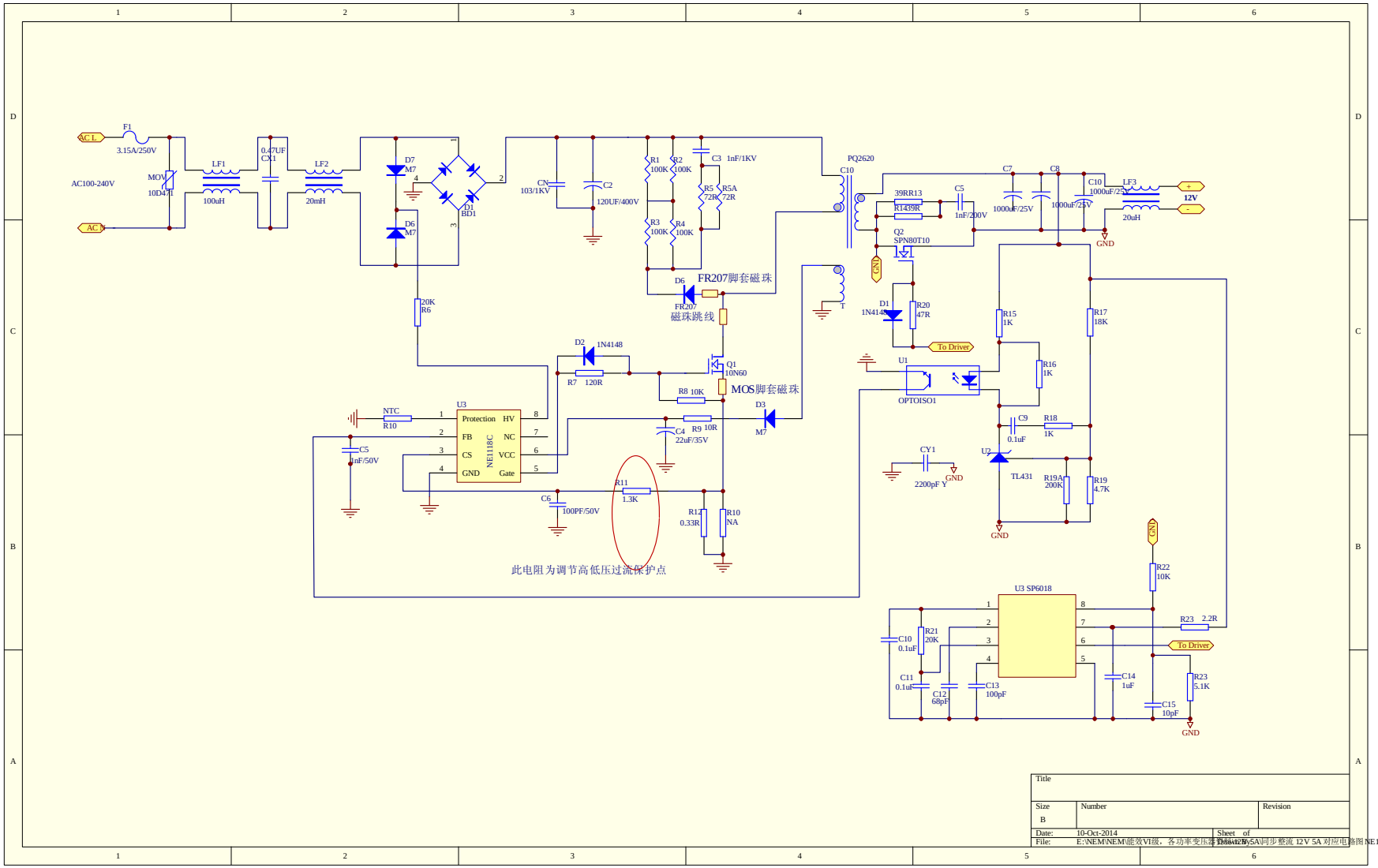

AC L
AC N
AC100-240V
F1
3.15A/250V
MOV
10D471
LF1
100uH
0.47UF
CX1
LF2
20mH
D7
M7
D6
M7
D1
BD1
CN
103/1KV
C2
120UF/400V
R1
100K
R2
100K
R3
100K
R4
100K
C3
1nF/1KV
R5
72K
R5A
72R
PQ2620
C10
FR207脚套磁珠
D6
FR207
磁珠跳线
20K
R6
D2
1N4148
R7
120R
Q1
10N60
R8
10K
MOS脚套磁珠
D3
M7
U3
NTC
R10
C5
1nF/50V
Protection
FB
CS
GND
HV
NC
VCC
Gate
NE1118C
C4
22uF/35V
R9
10R
C6
100PF/50V
R11
1.3K
R12
0.33R
R10
NA
此电阻为调节高低压过流保护点
39RR13
RI439R
C5
1nF/200V
C7
1000uF/25V
C8
1000uF/25V
C10
1000uF/25V
LF3
20uH
12V
Q2
SPN80T10
GND
D1
1N4148
R20
47R
To Driver
U1
OPTOISO1
R15
1K
R16
1K
R17
18K
C9
0.1uF
R18
1K
U2
TL431
R19A
200K
R19
4.7K
CY1
2200pF Y
R22
10K
U3 SP6018
R21
20K
C10
0.1uF
C11
0.1uF
C12
68pF
C13
100pF
C14
1uF
R23
2.2R
R23
5.1K
C15
10pF
Title
Size
B
Number
Revision
Date:
10-Oct-2014
Sheet of
File:
E:\NEM\NEM\能效VI级，各功率变压器\NE1118 5A\同步整流 12V 5A 对应电路图 NE1118 R.DDB
Drawn By: