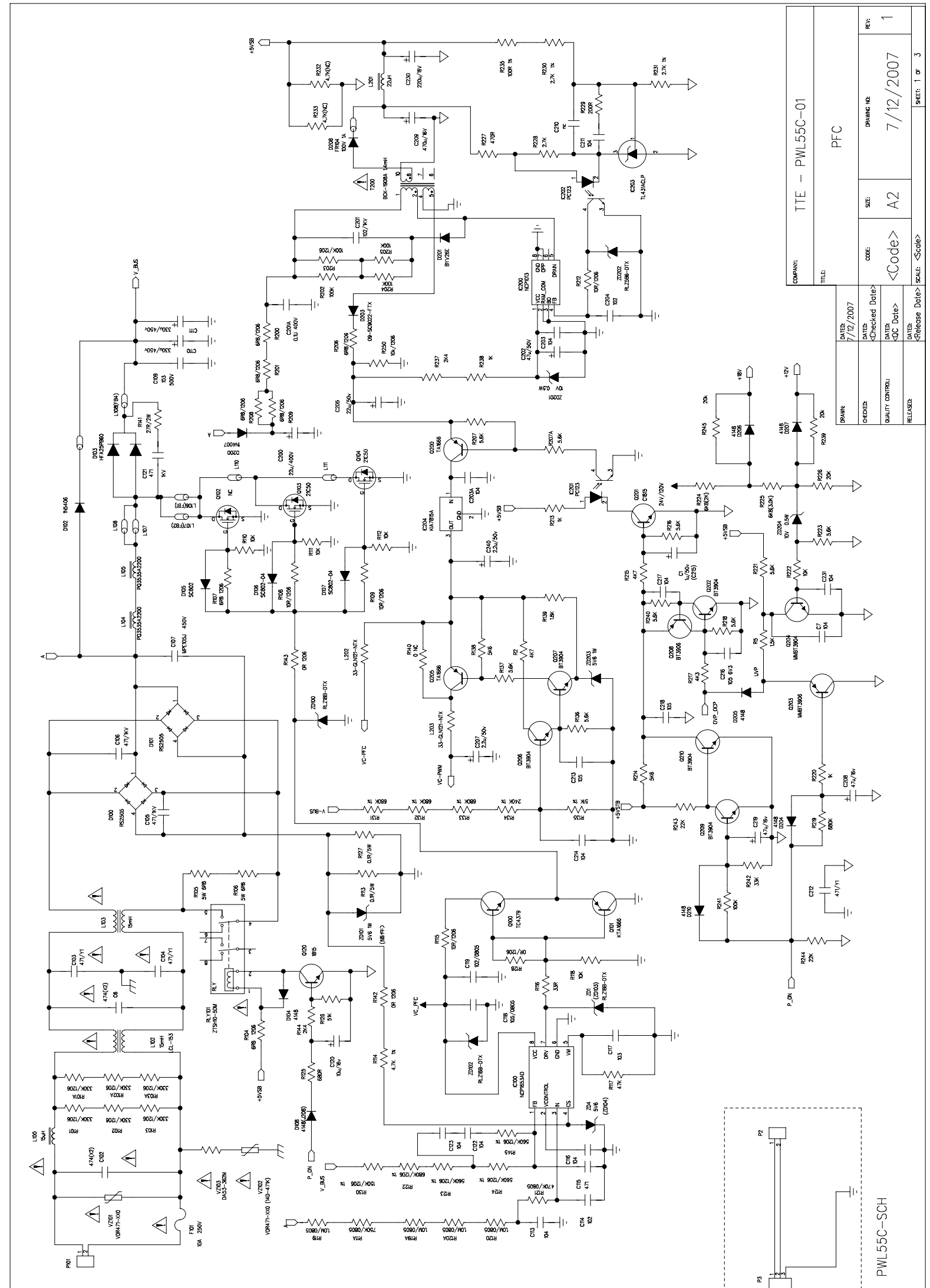
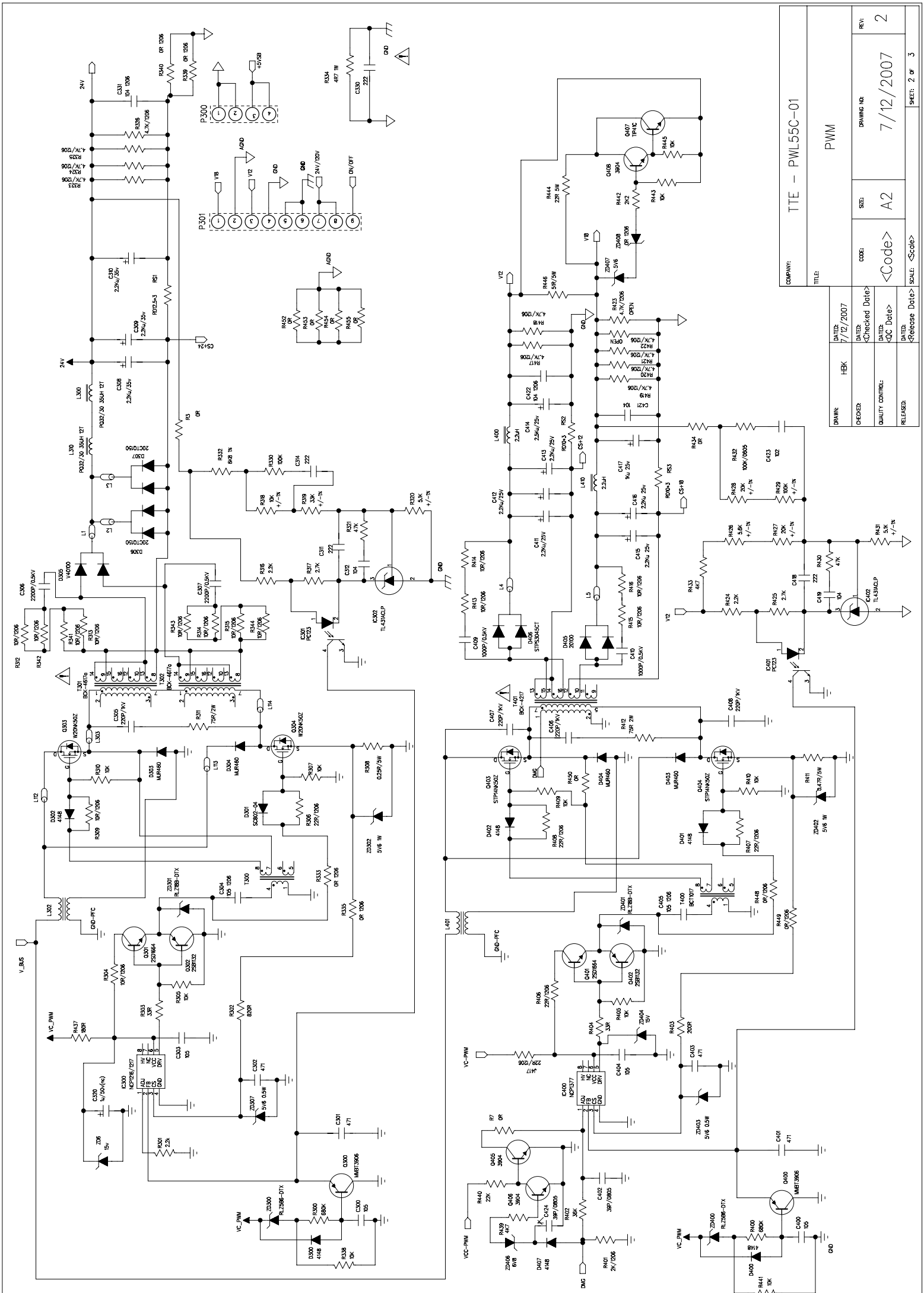
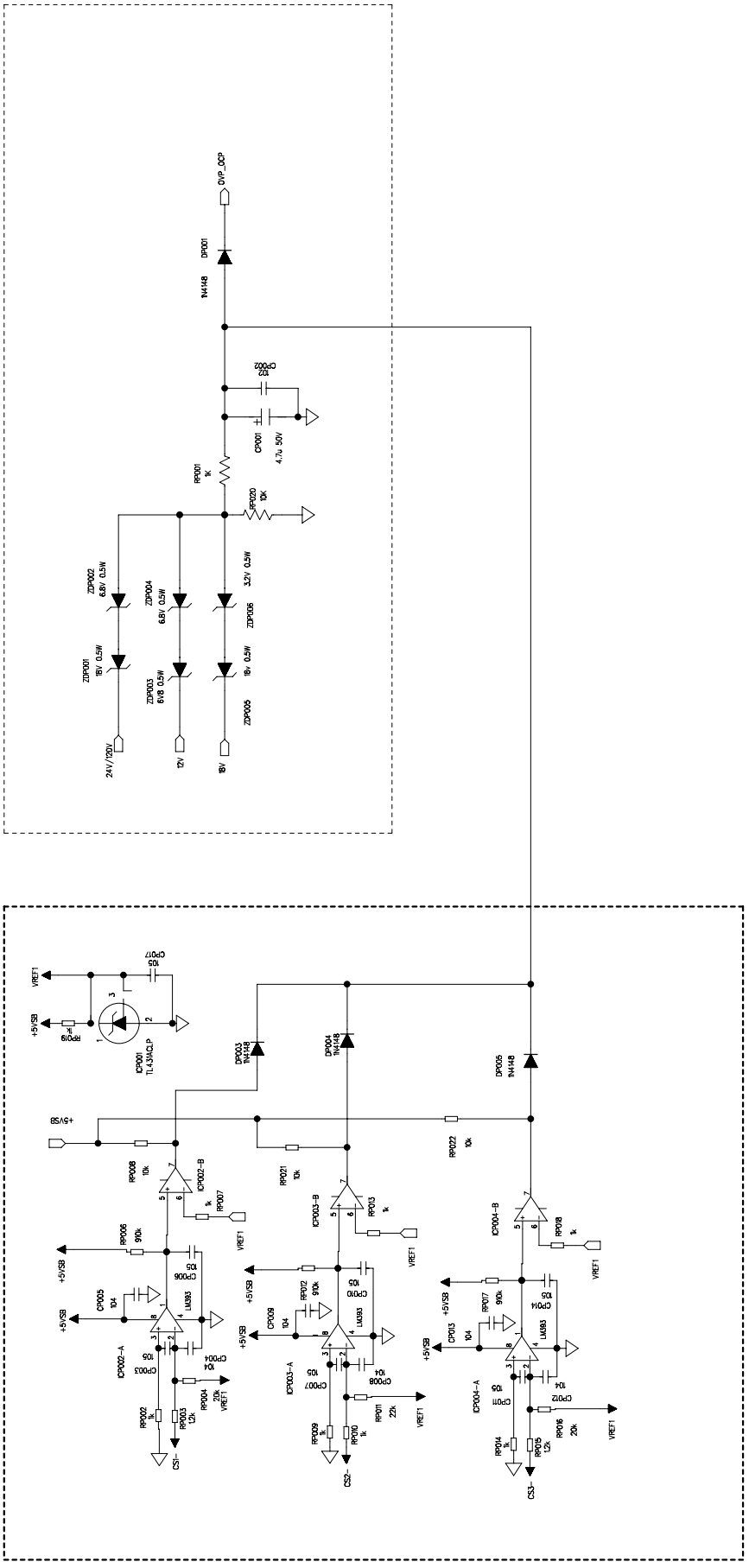

COMPANY: TTE - PWL55C-01
TITLE: PFC
CODE: <Code>
SIZE: A2
DRAWING NO:
7/12/2007
REV: 1
SHEET: 1 of 3
DRAWN: DATED: 7/12/2007
CHECKED: DATED: <Checked Date>
QUALITY CONTROL: DATED: <QC Date>
RELEASED: DATED: <Release Date>
SCALE: <Scale>
PWL55C-SCH


COMPANY:
TTE - PWL55C-01
TITLE:
PWM
DRAWN: HBK
DATED: 7/12/2007
CHECKED:
DATED: <Checked Date>
QUALITY CONTROL:
DATED: <QC Date>
RELEASED:
DATED: <Release Date>
CODE: <Code>
SIZE: A2
DRAWING NO:
7/12/2007
REV: 2
SHEET: 2 OF 3
SCALE: <Scale>
24V
+5VSB
GND
AGND
VCC_PWM
V_BUS
GND-PFC
P300
P301
IC300 NCP1216/1217
IC400 NCP1377
IC301 PC123
IC302 TL431ACLP
IC401 PC123
IC402 TL431ACLP
Q300 MMBT3906
Q400 MMBT3906
Q301 2SD1664
Q302 2SB1132
Q401 2SD1664
Q402 2SB1132
Q303 W20NK50Z
Q304 W20NK50Z
Q403 STP4NK50Z
Q404 STP4NK50Z
Q405 3904
Q406 3904
Q407 TIP41C
Q408 3904
T300 BCX-4617a
T301 BCX-4617a
T400 BCX-4217
T401 BCX-4217
D300 4148
D301 SCR202-04
D302 4148
D303 MUR460
D304 MUR460
D305 V40100
D306 20CTQ150
D307 20CTQ150
D400 4148
D401 4148
D402 4148
D403 MUR460
D404 MUR460
D405 2K010
D406 STPS30H45CT
D407 4148
ZD300 RLZ5V6B-DTX
ZD301 RLZ7B5B-DTX
ZD302 5V6 1W
ZD400 RLZ5V6B-DTX
ZD401 RLZ7B5B-DTX
ZD402 5V6 1W
ZD403 5V6 0.5W
ZD404 15V
ZD406 6V8
ZD407 5V6
ZD408 OR 1206
ZD307 5V6 0.5W
L300 PQ32/30 350uH 12T
L301 PQ32/30 350uH 12T
L400 2.2uH
L410 2.2uH
L401
T300
T400
R3 OR
R7 OR
R302 820R
R303 33R
R304 10R/1206
R305 10K
R306 22R/1206
R307 10K
R308 0.25R/5W
R309 10R/1206
R310 10K
R311 75R/2W
R312 10R/1206
R313 10R/1206
R314 10R/1206
R315 10R/1206
R330 100K
R331 10R/1206
R332 6K8 1%
R333 OR 1206
R334 4R7 1W
R335 OR 1206
R336 2.2K
R337 2.7K
R338 10K +/-1%
R339 33K +/-1%
R340 OR 1206
R341 10R/1206
R342 10R/1206
R343 10R/1206
R344 10R/1206
R345 OR
R346 OR
R347 OR
R348 OR
R349 OR
R350 OR
R351 OR
R352 OR
R353 OR
R354 OR
R355 OR
R356 4.7K/1206
R357 4.7K/1206
R358 4.7K/1206
R359 OR 1206
R360 5.3K +/-1%
R361 4.7K
R362 4.7K
R363 4.7K
R364 4.7K
R365 4.7K
R366 4.7K
R367 4.7K
R368 4.7K
R369 4.7K
R370 4.7K
R371 4.7K
R372 4.7K
R373 4.7K
R374 4.7K
R375 4.7K
R376 4.7K
R377 4.7K
R378 4.7K
R379 4.7K
R380 4.7K
R381 4.7K
R382 4.7K
R383 4.7K
R384 4.7K
R385 4.7K
R386 4.7K
R387 4.7K
R388 4.7K
R389 4.7K
R390 4.7K
R391 4.7K
R392 4.7K
R393 4.7K
R394 4.7K
R395 4.7K
R396 4.7K
R397 4.7K
R398 4.7K
R399 4.7K
R400 680K
R401 2K/1206
R402 38K
R403 200R
R404 33R
R405 10K
R406 22R/1206
R407 22R/1206
R408 22R/1206
R409 10K
R410 10K
R411 0.47R/5W
R412 75R 2W
R413 10R/1206
R414 10R/1206
R415 10R/1206
R416 10R/1206
R417 4.7K/1206
R418 4.7K/1206
R419 4.7K/1206
R420 4.7K/1206
R421 4.7K/1206
R422 4.7K/1206
R423 4.7K OPEN
R424 2.2K
R425 2.7K
R426 5.6K +/-1%
R427 20K +/-1%
R428 20K +/-1%
R429 100K +/-1%
R430 4.7K
R431 5.1K +/-1%
R432 100K/0805
R433 4K7
R434 OR
R435 10K
R436 10K
R437 68R
R438 10K
R439 4K7
R440 22K
R441 10K
R442 2K2
R443 10K
R444 22R 5W
R445 10K
R446 5R/5W
R447 228/1206
R448 OR/1206
R449 OR/1206
C300 1u/50V(NC)
C301 471
C302 471
C303 105
C304 105 1206
C305 220P/1KV
C306 220P/0.5KV
C307 220P/0.5KV
C308 2.2Nu/35V
C309 2.2Nu/35V
C310 2.2Nu/35V
C311 222
C312 104
C313 222
C314 222
C315 104
C316 104
C317 104
C318 104
C319 104
C320 1u/50V(NC)
C321 104
C322 104 1206
C323 102
C324 39P/0805
C325 104
C326 104
C327 104
C328 104
C329 104
C330 222
C331 104 1206
C400 105
C401 471
C402 39P/0805
C403 471
C404 105
C405 105 1206
C406 220P/1KV
C407 220P/1KV
C408 220P
C409 1000P/0.5KV
C410 1000P/0.5KV
C411 2.2Nu/25V
C412 2.2Nu/25V
C413 2.2Nu/25V
C414 2.2Nu/25V
C415 2.2Nu 25V
C416 2.2Nu 25V
C417 1Nu 25V
C418 222
C419 104
C420 104
C421 104
RS1 RD12.5x3
RS2 RD10x3
RS3 RD10x3
CS+24
CS+12
CS+18
VCC-PWM
DMG
Z106 15V
Z107 15V



COMPANY: TTE - PWL55C-01					
TITLE: OVP-OCP			CODE: <Code>	SIZE: A2	DRAWING NO: 7/12/2007 REV: 3
DRAWN: HBK	DATED: 7/12/2007				SHEET: 3 OF 3
CHECKED:	DATED: <Checked Date>				
QUALITY CONTROL:	DATED: <QC Date>				
RELEASED:	DATED: <Release Date>		SCALE: <Scale>		